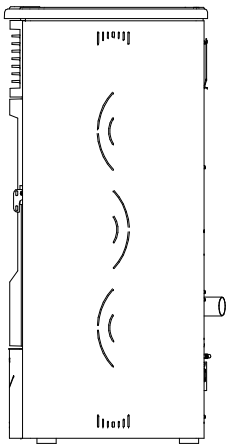

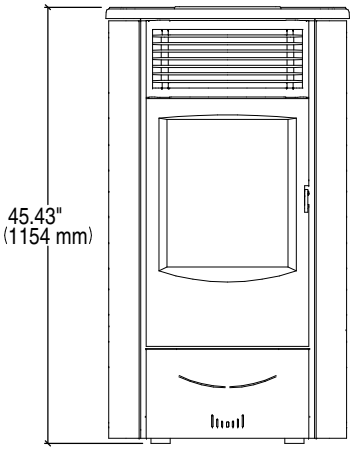

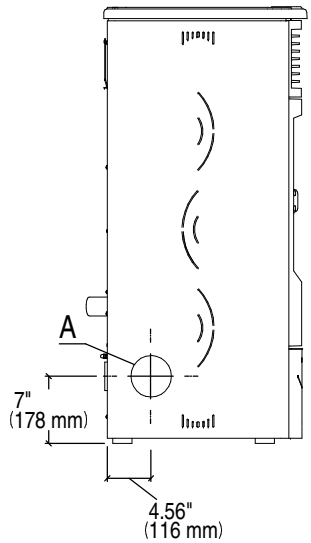

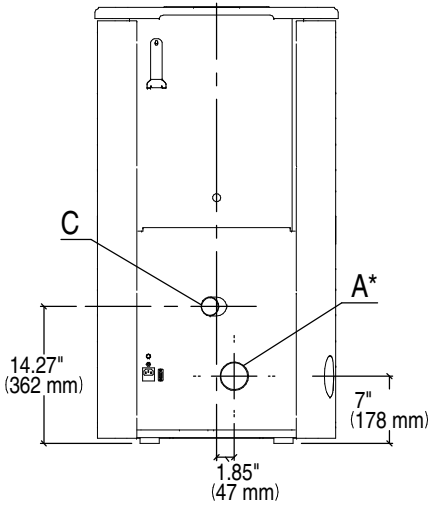

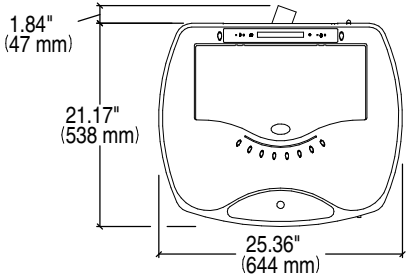

A	C
2.95" (75mm)	1.97" (50mm)